DIMENSIONS ARE IN INCHES			
SIZE	**4**	**6**	**8**
A	9	11	13 1/2
B	19 1/2	23 1/2	30 3/8
C	7 1/2	9 3/8	13 1/8
D	14 1/2	17 1/2	22 3/8
E	4 1/8	4 1/8	5 1/4
F	6 5/8	7 5/8	8 3/4
G	4 7/16	5 3/8	6
H	21	31	45

ITEM	DESCRIPTION	QTY.	MAT'L
1	Body	1	DI (4" CI)
2	Disc	1	DI (4" CI)
3	Stem Nut	1	BRASS
4	Female Stem Collar	1	BRASS
5	Male Stem Collar	1	SS
6	Stem Cap	1	CI
7	HHCS	3	SS
8	Stop Screw	1	SS
9	Operating Nut	1	CI
10	Stem	1	SS
11	O-Ring	1	BUNA-N
12	Shur Joint Flange	1	DI
13	Flange Gasket	1	BUNA-N

Notes:

- 125# ANSI flange
- NSF-61 Approved 2 part epoxy
- G = Face of flange to centerline of stem
- DI is A536 65-45-12
- CI is ASTM A126 Class 30

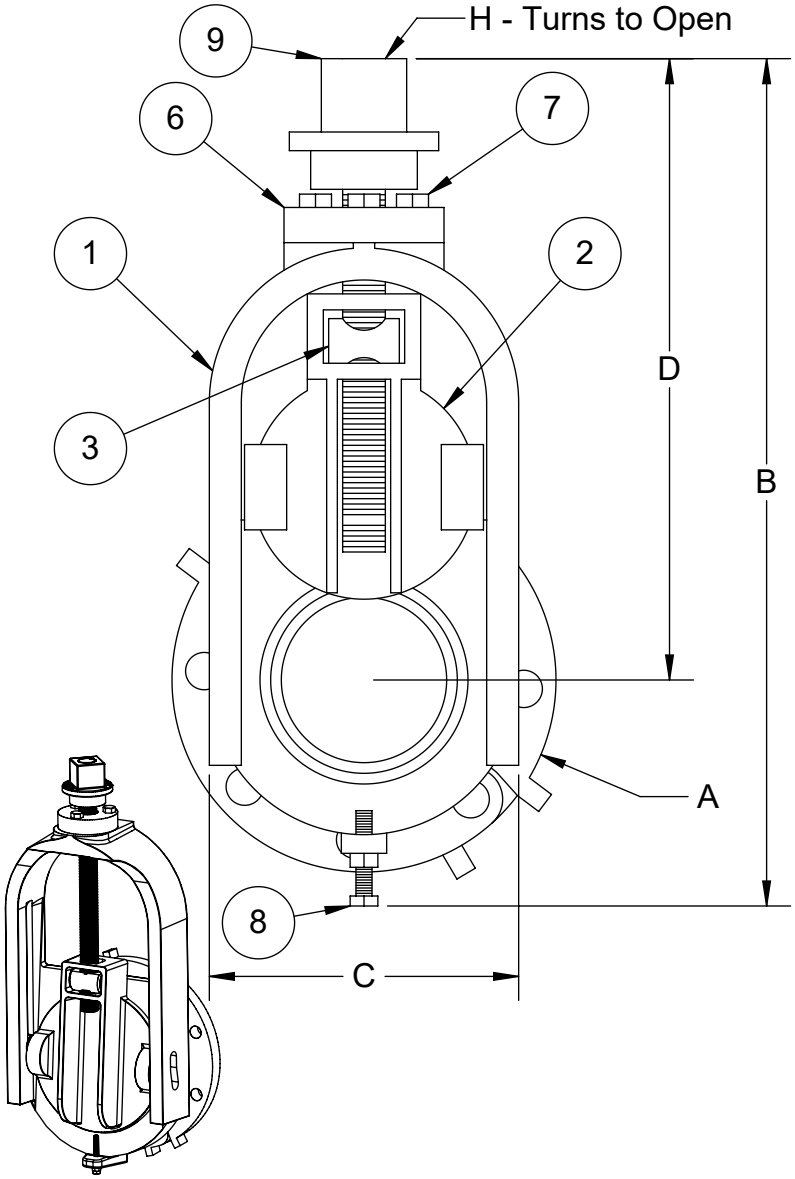

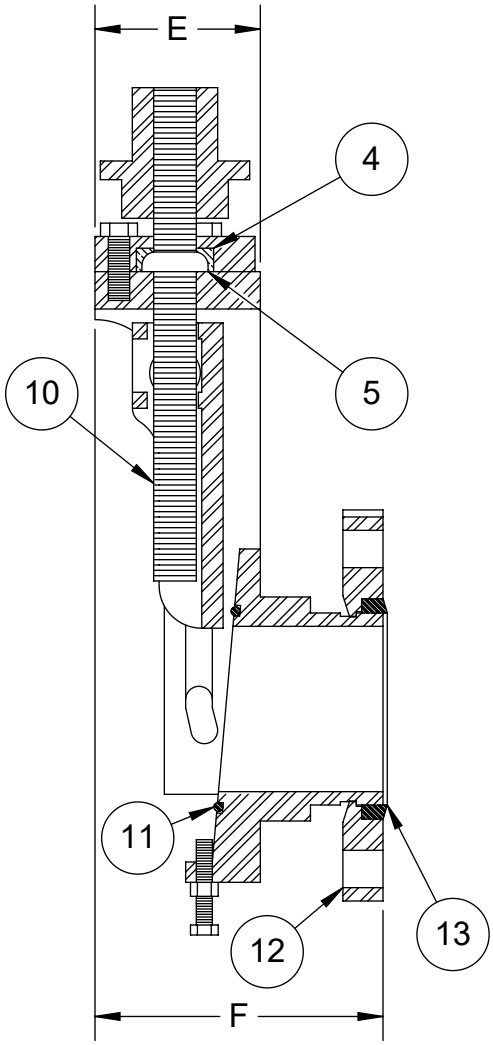

TROY VALVE — A DIVISION OF PENN-TROY MANUFACTURING INC. — MANUFACTURING TRUST.	www.TroyValve.com	TITLE: **4" - 8" Sluice Gate NRS**	DWN. TE
	PHONE: 1-570-297-2125	MAT'L: See Above	PART NO: A3500
	271- DO NOT SCALE DRAWING	DATE: 3/26/2021	PAGE: